SDAF 225-226 Series

FSQ

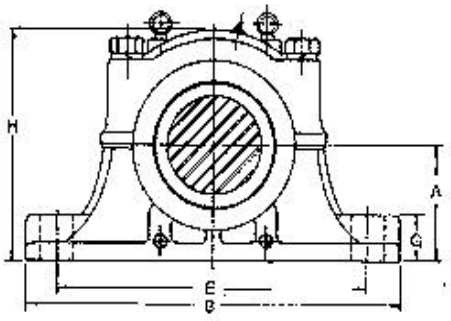

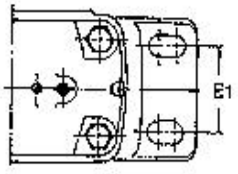

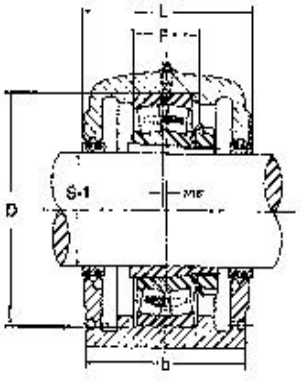

SERIES SDAF 500-HOUSING DIMENSIONS

Housing No. * § †	A	B	b	G	E		E1	H	L	Bolts (No. Req'd)	Wt. in lbs.	D	F
	in.	in.	in.	in.	Max. in.	Min. in.	in.	in.	in.	in.	*	mm	mm
SDAF 520	4-1/2	15-1/4	6	1-7/8	13-1/8	11-5/8	3-3/8	8-15/16	6-3/4	(4)- 3/4	64.8	180	55.8
SDAF 522	4-15/16	16-1/2	6-3/4	2-1/8	14-1/2	12-5/8	4	9-7/8	7-1/4	(4)- 7/8	96.1	200	62.8
SDAF 524	5-1/4	16-1/2	6-7/8	2-1/4	14-1/2	13-1/4	4-1/8	10-1/2	7-3/8	(4)- 7/8	107.3	215	67.8
SDAF 526	6	18-3/8	7-1/2	2-3/8	16	14-5/8	4-1/2	11-7/8	8	(4)- 1	147.2	230	73.8
SDAF 528	6	20-1/8	7-1/2	2-3/8	17-1/8	16	4-1/2	12-1/16	7-15/16	(4)- 1-1/8	131.4	250	77.8
SDAF 530	6-5/16	21-1/4	7-7/8	2-1/2	18-1/4	17	4-3/4	12-13/16	8-3/8	(4)- 1-1/8	157.1	270	82.8
SDAF 532	6-11/16	22	8-1/4	2-1/2	19-1/4	17-3/8	5	13-11/16	8-3/4	(4)- 1-1/8	187.1	290	89.8
SDAF 534	7-1/16	24-3/4	9	2-1/2	21-5/8	19-3/8	5-1/2	14-1/4	9-5/8	(4)- 1-1/4	212.3	310	95.8
SDAF 536	7-1/2	26-3/4	9-3/8	2-3/4	23-5/8	20-7/8	5-7/8	15-1/2	10	(4)- 1-1/4	292.1	320	95.8
SDAF 538	7-7/8	27-5/8	10	3	23-1/2	21-1/2	6-1/4	16-1/4	10-5/8	(4)- 1-3/8	338.4	340	101.8
SDAF 540	8-1/4	28-3/4	10-1/2	3-1/4	25	23	6-3/4	17-1/8	11-1/8	(4)- 1-3/8	343.7	360	107.8
SDAF 544	9-1/2	32	11-1/4	3-1/2	27-7/8	25-5/8	7-1/4	19-1/4	11-7/8	(4)- 1-1/2	513.0	400	117.8

SERIES SDAF 600-HOUSING DIMENSIONS

Housing No. * § †	A	B	b	G	E		E1	H	L	Bolts (No. Req'd)	Wt. in lbs.	D	F
	in.	in.	in.	in.	Max. in.	Min. in.	in	in.	in.	in.	*	mm	mm
SDAF 616	4-1/4	14-1/4	5-1/2	1-3/4	12-5/8	10-5/8	3-1/4	8-1/4	6-3/8	(4)- 5/8	49.3	170	67.8
SDAF 617	4-1/2	15-1/4	6	1-7/8	13-1/8	11-5/8	3-3/8	8-15/16	6-3/4	(4)- 3/4	67.2	180	69.8
SDAF 618	4-3/4	15-1/2	6-1/8	2	13-1/2	12	3-5/8	9-7/16	6-7/8	(4)- 3/4	72.0	190	73.8
SDAF 620	5-1/4	16-1/2	6-7/8	2-1/4	14-1/2	13-1/4	4-1/8	10-1/2	7-3/8	(4)- 7/8	110.3	215	82.8
SDAF 622	6	18-3/8	7-1/2	2-3/8	16	14-5/8	4-1/2	11-7/8	8	(4)- 1	147.1	240	89.8
SDAF 624	6-5/16	21-1/4	7-7/8	2-1/2	18-1/4	17	4-3/4	12-13/16	8-3/8	(4)- 1-1/8	171.7	260	95.8
SDAF 626	6-11/16	22	8-1/4	2-1/2	19-1/4	17-3/8	5	13-11/16	8-3/4	(4)- 1-1/8	193.5	280	102.8
SDAF 628	7-1/16	24-3/4	9	2-1/2	21-5/8	19-3/8	5-1/2	14-1/4	9-3/8	(4)- 1-1/4	228.3	300	111.8
SDAF 630	7-1/2	26-3/4	9-3/8	2-3/4	23-5/8	20-7/8	5-7/8	15-3/16	9-3/4	(4)- 1-1/4	300.2	320	117.8
SDAF 632	7-7/8	27-5/8	10	3	23-1/2	21-1/2	6-1/4	16-1/4	10-5/8	(4)- 1-3/8	355.1	340	123.8
SDAF 634	8-1/4	28-3/4	10-1/2	3-1/4	25	23	6-3/4	17-1/8	11-1/8	(4)- 1-3/8	393.8	360	129.8
SDAF 636	8-7/8	30-1/2	10-3/4	3-1/4	26-3/8	24-1/8	6-7/8	17-15/16	11-3/8	(4)- 1-1/2	404.7	380	135.8
SDAF 638	9-1/2	32	11-1/4	3-1/2	27-7/8	25-5/8	7-1/4	19-1/4	11-7/8	(4)- 1-1/2	484.4	400	141.8
SDAF 640	9-7/8	33-1/2	11-3/4	3-1/2	29-1/4	26-5/8	7-5/8	19-15/16	12-3/8	(4)- 1-5/8	564.1	420	147.8